NO: 7

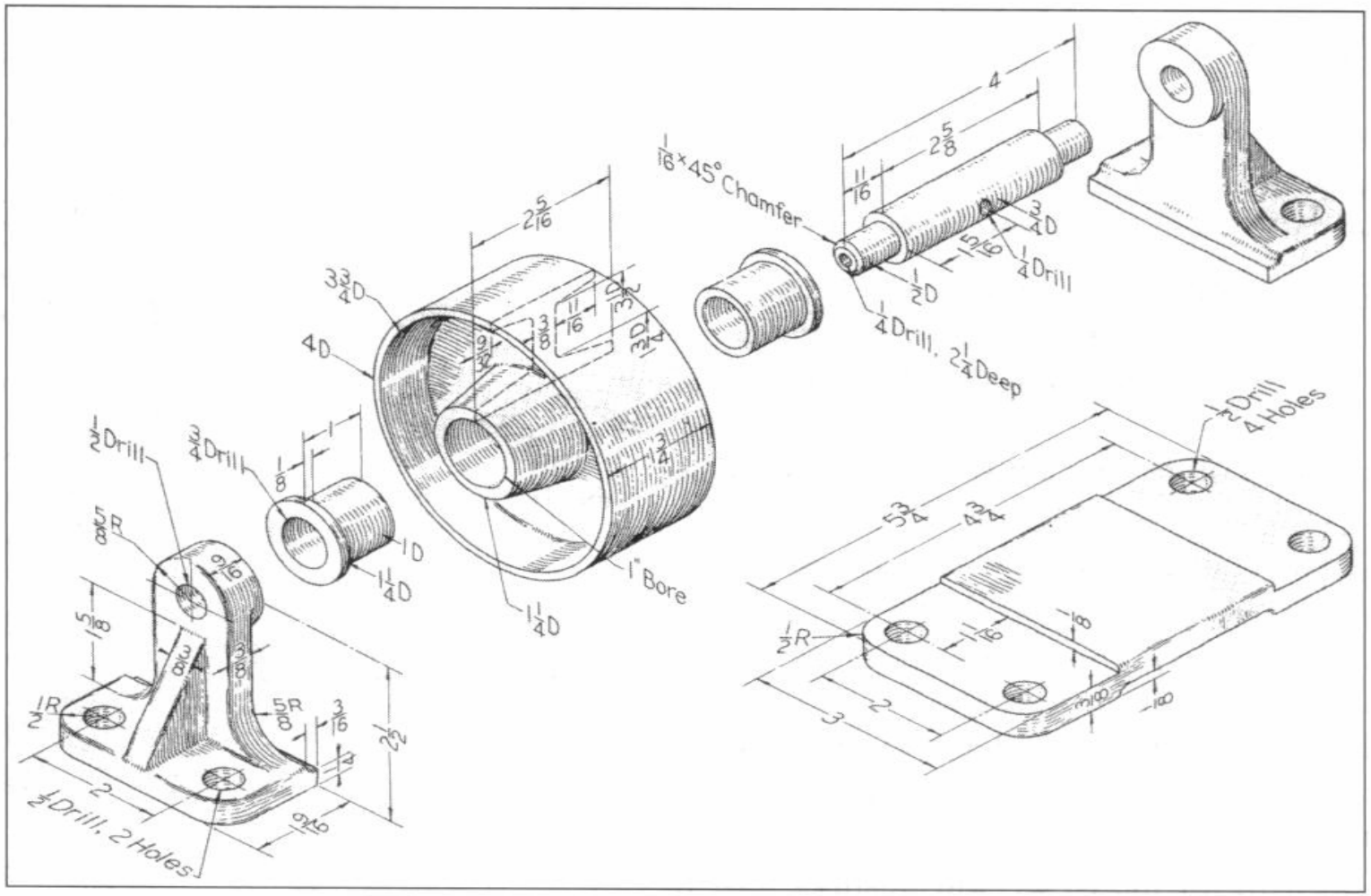

Bell-roller support