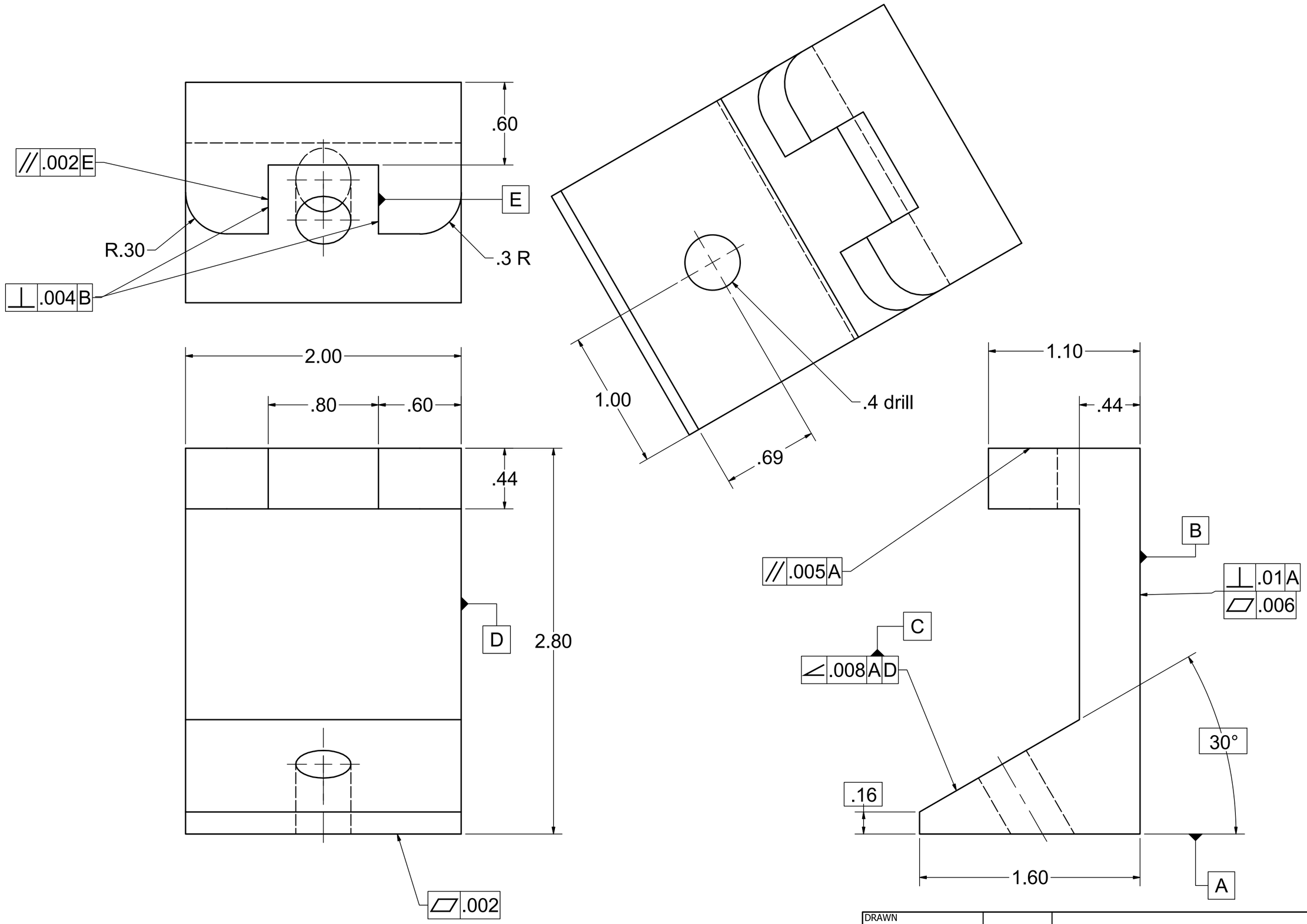

DRAWN Dr Murat Sonmez	18.03.2010	STAND
CHECKED		TITLE METU NCC Mechanical Eng.
QA		
MFG		
APPROVED		
	St- 40	SIZE C / DWG NO HS3 / REV
		SCALE 1/1 / SHEET 1 OF 1