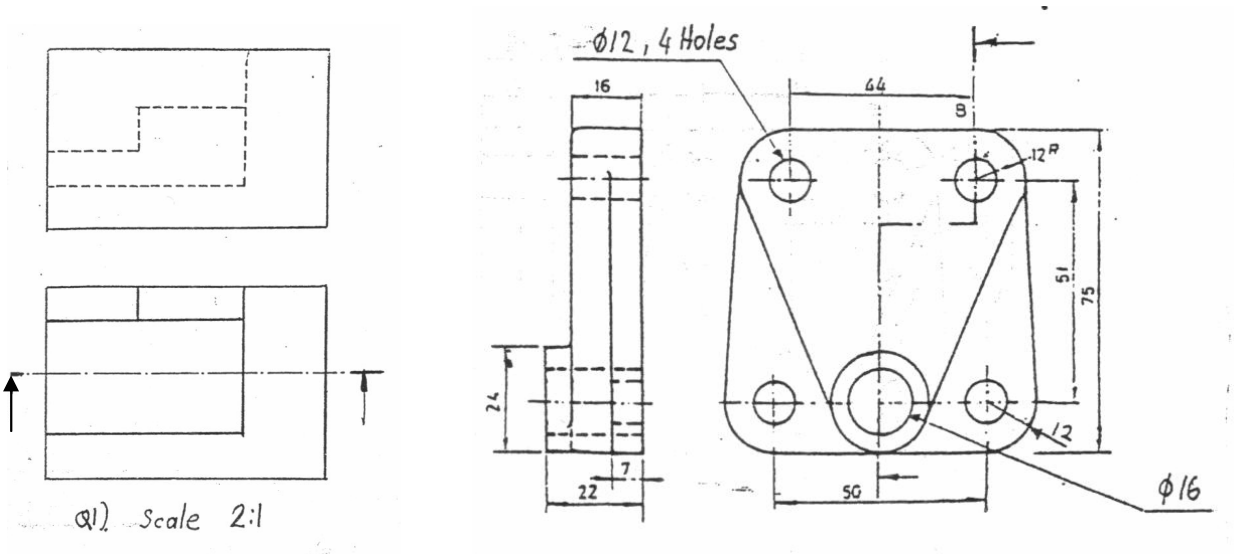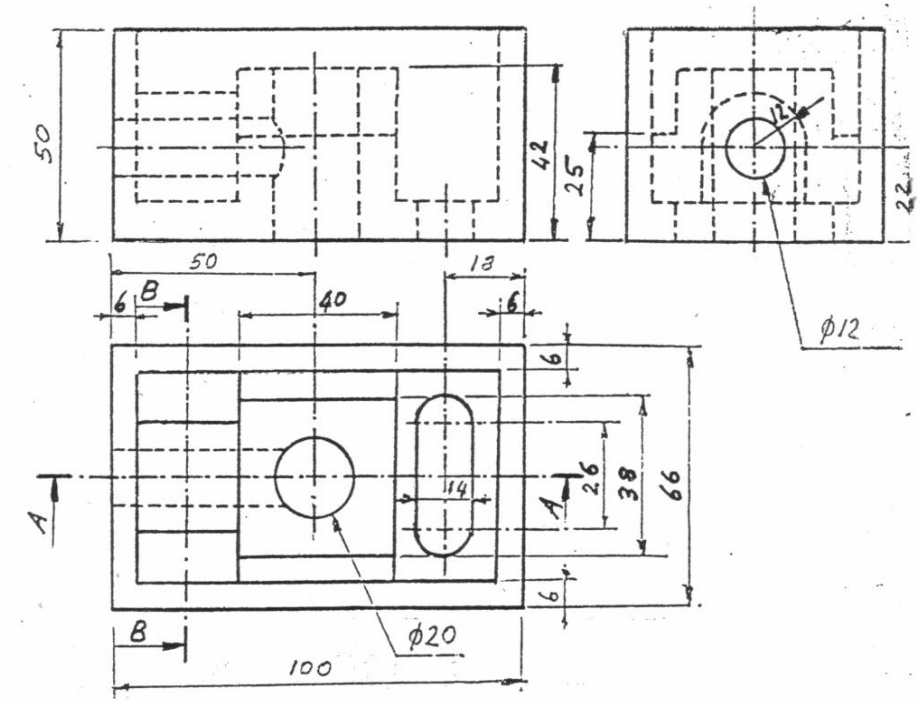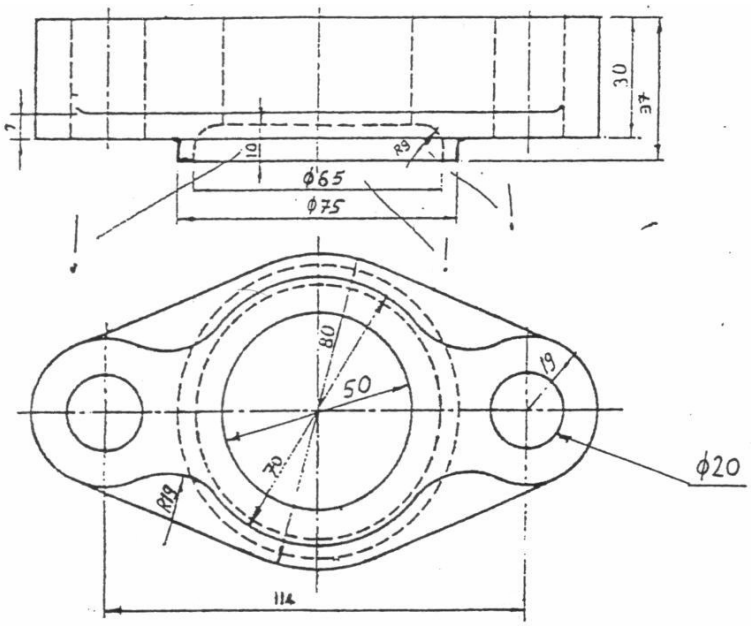MECH 113
Sectioning Exercises